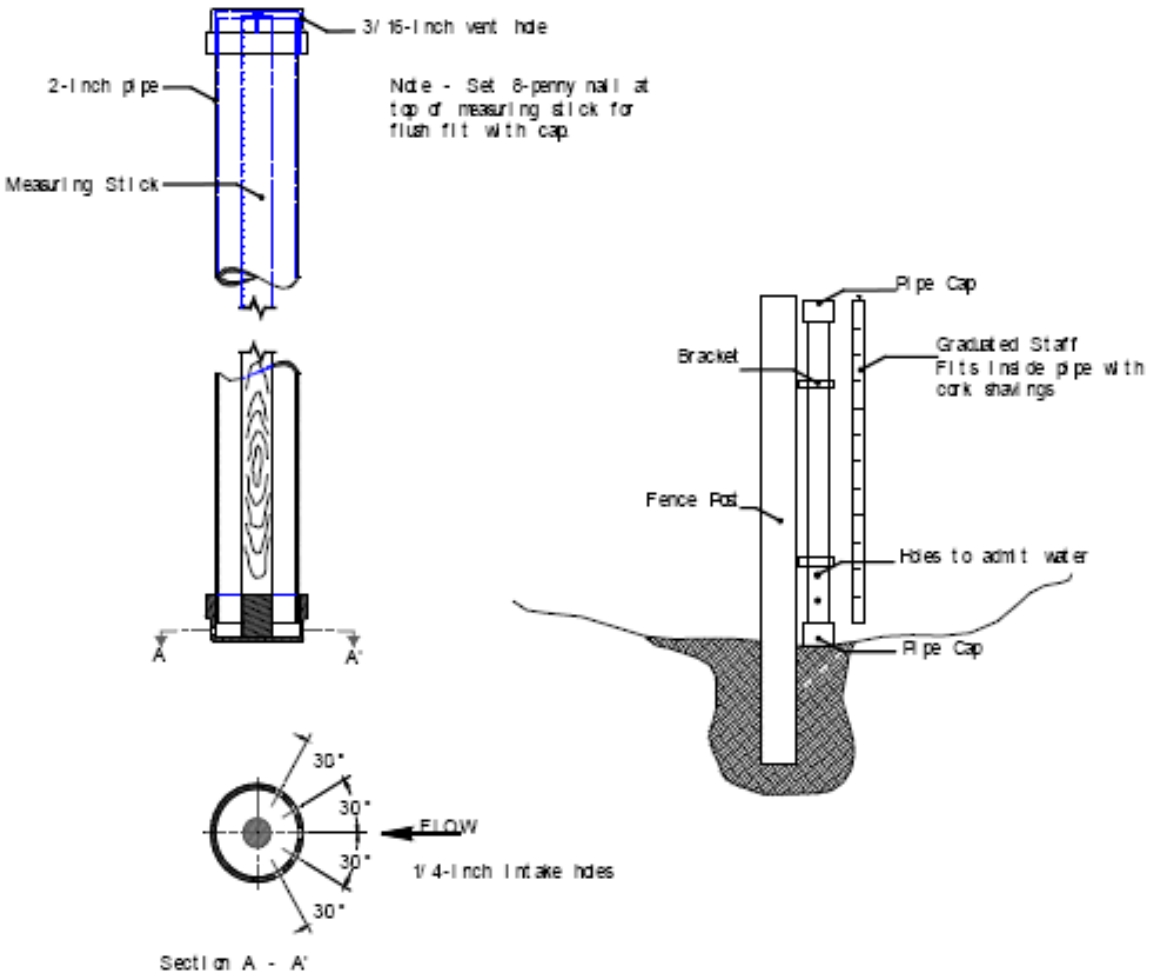

Figure 42.1-2 Schematic of Crest Gage