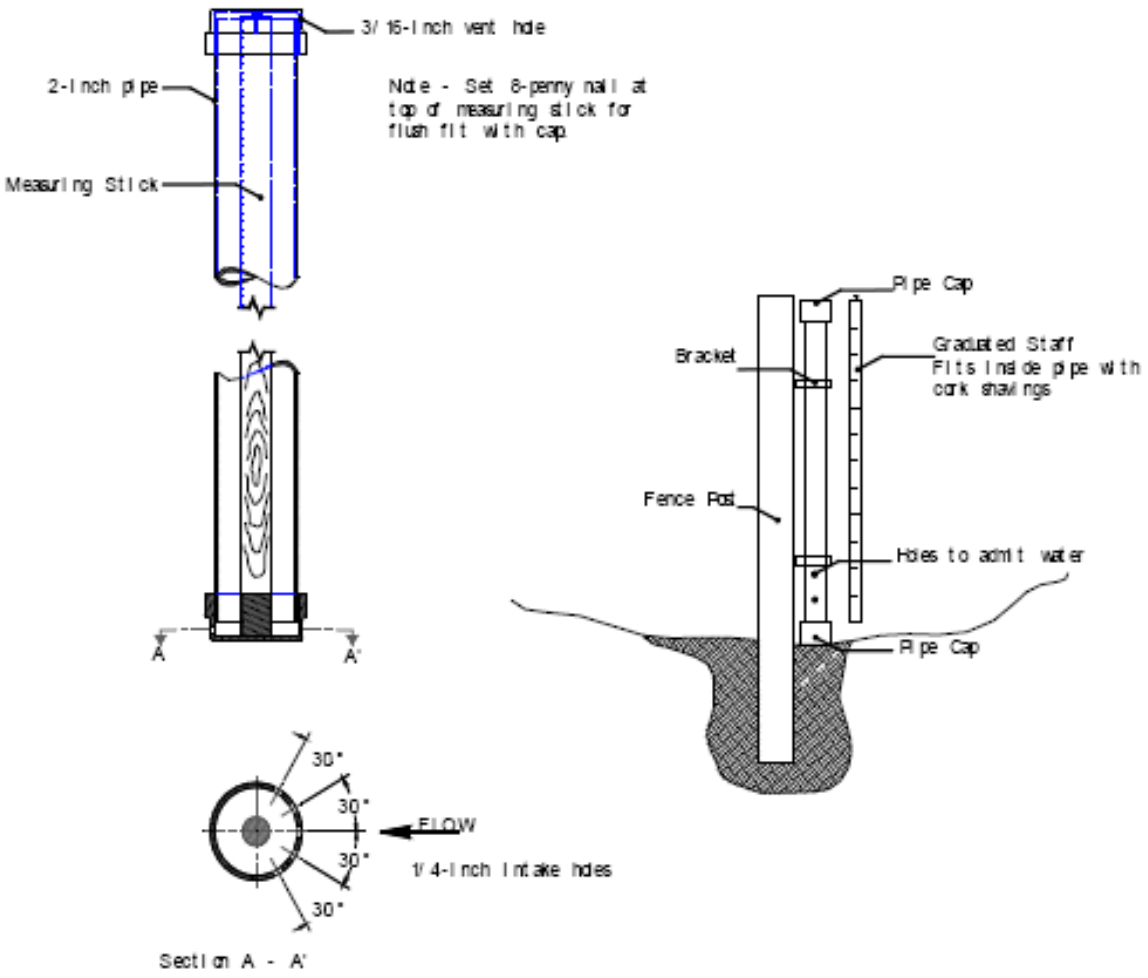

Figure 18.1-2 Schematic of Crest Stage Gage